Heaven's light is our guide

RAJSHAHI UNIVERSITY OF ENGINEERING & TECHNOLOGY
Department of Mechatronics Engineering

Assignment

Submitted By:
Nawshin Nawar
ID: 2008039
4th Year , Even Semester
Department of Mechatronics Engineering
Rajshahi University of Engineering & Technology, Rajshahi-6204.

Submitted To:
Dr. Dip Kumar Saha
Assistant Professor
Department of Mechatronics Engineering
Rajshahi University of Engineering & Technology, Rajshahi-6204.

Md. Robiul Islam
Assistant Professor
Department of Mechatronics Engineering
Rajshahi University of Engineering & Technology, Rajshahi-6204.

Date of Submission: 3rd May, 2026

MTE 4205

Robotics

ASSIGNMENT

Course: Robotics (MTE 4205)
ID:2008039

Introduction

The development of robotic systems for handling delicate objects such as chocolates has become a significant focus in industries like food packaging. Traditional rigid robots face challenges when dealing with fragile items, often leading to damage during the handling process. To overcome this, robotic grippers with enhanced adaptability are being designed to handle diverse objects, combining rigid and soft components to ensure both efficiency and safety .

Problem statement

"Design a robotic solution based on a 5-bar planar parallel robot and an end-effector to use chocolates and construct the picture board on the chocolate tray. The robot design should meet the following requirements. The robot should be mounted on a horizontal platform, and it should be able to house and maneuver the end-effector (eg. a gripper). You are free to design the environment and can choose any cameras or sensors you desire. The robot should be able to locate and pick up the chocolate from the pick-up area on the conveyor and place it in the rows and columns in the box. The size of the tray is 20cm x 20cm and can hold 100 chocolates. Assume any information that is not available in the project specification."

Kinematic Design

The robot is designed as a symmetric 5-bar planar parallel manipulator. The two base joints are fixed on a horizontal platform and are actuated by motors. The remaining joints are passive revolute joints. The end-effector is attached at the common moving point of the two parallel arms.

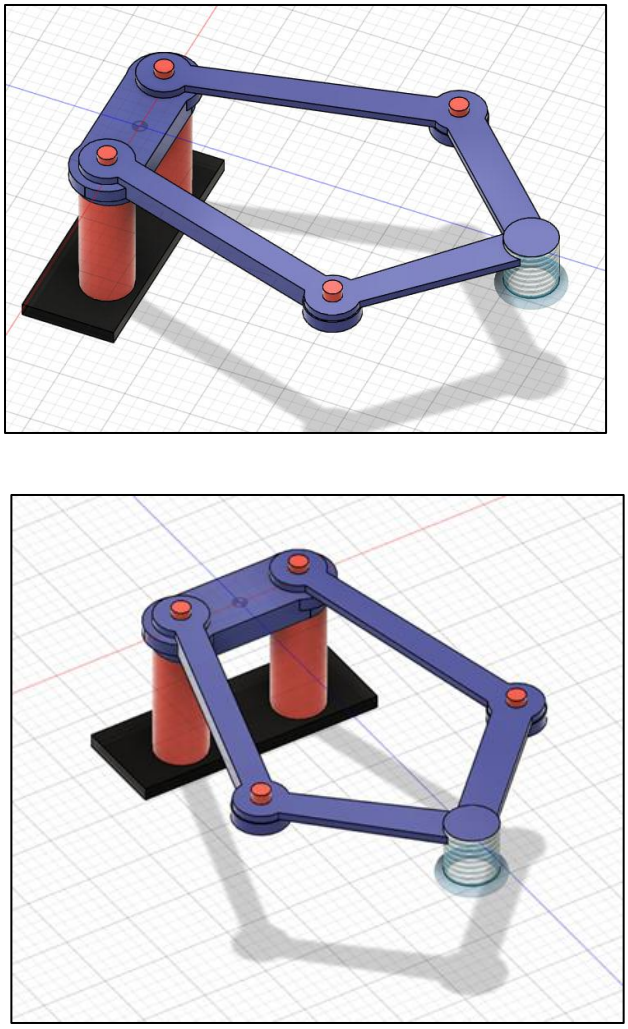

Figure: CAD model of the proposed 5-bar robot with vacuum end-effector

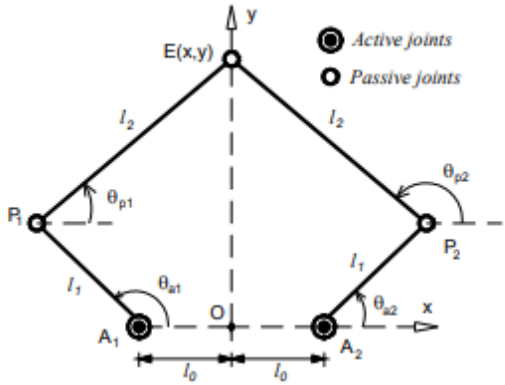

Figure: The five-bar planar parallel manipulator

Kinematics plays a vital role in robot design, influencing how the robot's joints move in relation to the end effector. The **forward kinematics** equation helps determine the robot's end-effector position from the joint angles, while **inverse kinematics** is crucial for determining the necessary joint movements from a target position. Various methods for kinematic calibration and improving the positioning accuracy are crucial in the operation of 5-bar robots which enhances the planar positioning accuracy of a parallel robot .

Assumed Design Parameters

Parameter	**Selected Value**
1.Tray size	200 mm x 200 mm
2.Tray grid	10 x 10
3.Grid pitch	20 mm
4.Chocolate major diameter	10 mm
5.Chocolate minor diameter	6 mm
6.End-effector vertical stroke	15-20 mm

Forward kinematics

In forward kinematics, we calculate the position of the end-effector (P) based on the joint angles and the link lengths.

1. Position of the end-effector:

The configuration of a 5-bar planar parallel robot can be described by vectors. Let the robot's links be denoted as l_1, l_2, l_3, l_4, l_5 and the corresponding joint angles as $\theta_1, \theta_2, \theta_3, \theta_4, \theta_5$.

Using vector kinematics:

- Position of motor 1: $\overrightarrow{P_1} = l_1[\cos(\theta_1), \sin(\theta_1)]$
- Position of motor 2: $\overrightarrow{P_2} = l_2[\cos(\theta_2), \sin(\theta_2)]$

For the manipulator, the end-effector position $\vec{P}$ is calculated by using the direct

Inverse kinematics

Inverse kinematics is the process of determining the joint angles $\theta_1, \theta_2, \theta_3$ based on a desired end-effector position (x, y).

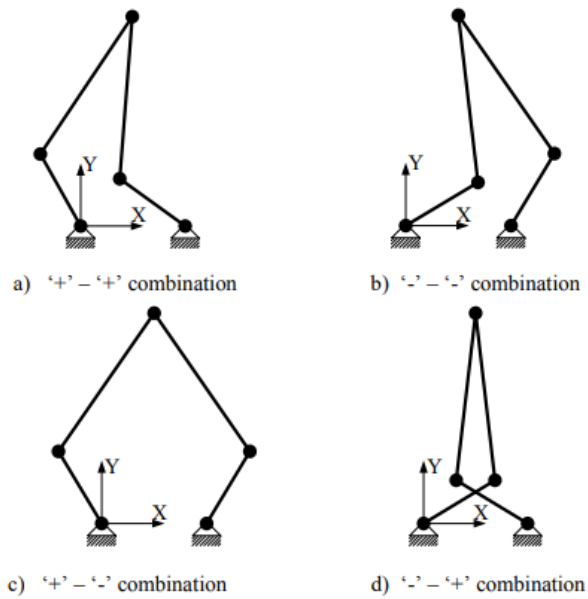

Figure: Four modes in the forward kinematic problem

Alpha angles:

$$\alpha_1 = \cos^{-1}\left(\frac{l_1^2 + (l_0 + x)^2 + y^2 - l_2^2}{2l_1\sqrt{(l_0 + x)^2 + y^2}}\right)$$
$$\alpha_2 = \cos^{-1}\left(\frac{l_1^2 + (l_0 - x)^2 + y^2 - l_2^2}{2l_1\sqrt{(l_0 - x)^2 + y^2}}\right)$$

Beta angles:

$$\beta_1 = \tan^{-1}\left(\frac{y}{l_0 + x}\right)$$
$$\beta_2 = \tan^{-1}\left(\frac{y}{l_0 - x}\right)$$

Joint Angles:

$$\theta_1 = \beta_1 \pm \alpha_1$$
$$\theta_2 = \pi - \beta_2 \pm \alpha_2$$

Four Possible Solutions:

The four possible working modes are:

Mode	$\boldsymbol{\theta_1}$	$\boldsymbol{\theta_2}$
++	$\beta_1 + \alpha_1$	$\pi - \beta_2 + \alpha_2$
+-	$\beta_1 - \alpha_1$	$\pi - \beta_2 + \alpha_2$
-+	$\beta_1 + \alpha_1$	$\pi - \beta_2 - \alpha_2$
–	$\beta_1 - \alpha_1$	$\pi - \beta_2 - \alpha_2$

4. End-Effector Design

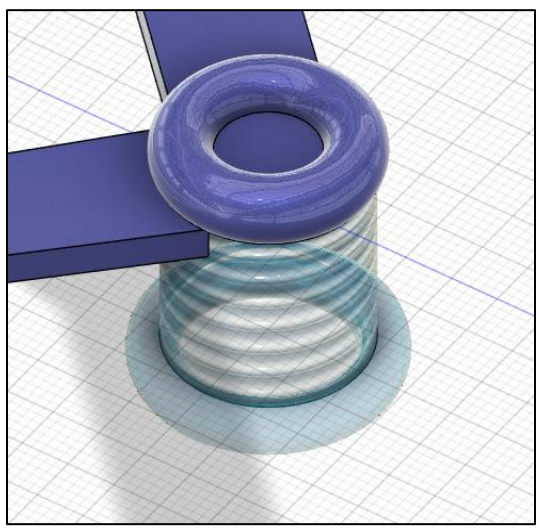

Figure: Close view of the proposed soft vacuum suction end-effector

The selected end-effector is a soft vacuum suction gripper. This design is suitable for chocolates because it applies gripping force gently over the upper surface instead of squeezing the chocolate from the sides. Since chocolates are surface-sensitive and can deform or mark easily, the gripping force should be just enough to lift the chocolate safely

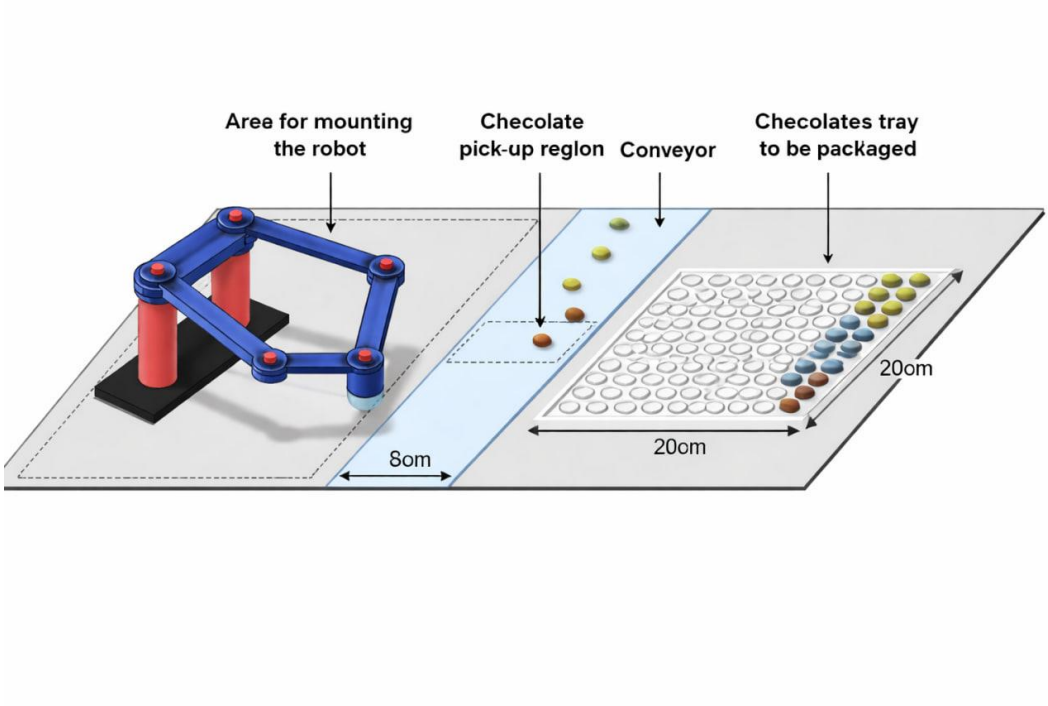

Figure: Working Principle of the system

Main Components of the End-Effector

Component	Function
Mounting ring	Connects the gripper to the final joint of the 5-bar robot
Soft suction cup	Contacts the chocolate surface and forms the vacuum seal
Bellows section	Provides vertical compliance and absorbs small height errors
Vacuum tube	Connects the suction cup to the vacuum source
Mini vacuum pump or ejector	Creates negative pressure for lifting the chocolate
Solenoid valve	Turns suction ON during pick and OFF during placement
Pressure sensor	Confirms whether the chocolate has been successfully picked
Food-safe silicone/TPU material	Prevents damage and contamination

Working Principle

The gripper works in four steps:

1. The robot moves the suction cup above the target chocolate.
2. The end-effector moves down until the soft lip touches the chocolate surface.
3. The solenoid valve activates suction and the pressure sensor confirms grip formation.
4. The robot lifts the chocolate, moves to the target tray cell and releases it by turning off suction or applying a short air blow-off.

This method is faster and simpler than a multi-finger mechanical gripper. It also reduces the possibility of chocolate deformation because the holding force is produced mainly by pressure difference rather than side compression.

Holding Force Requirement

The suction holding force is estimated by:

$$F_h = \Delta P \times A$$

where F_h is the holding force, ΔP is the pressure difference and A is the effective suction area.

For safe handling:

$$F_h \geq S_f(mg + ma)$$

where S_f is the safety factor, m is the chocolate mass, g is gravitational acceleration and a is the acceleration during robot motion. A safety factor of 2 to 3 is selected because the robot will perform repeated pick-and-place operations. However, the suction pressure should not be made unnecessarily high, because excessive normal force may damage the chocolate surface.

End-Effector Design Dimensions

Design Feature	Selected Value
Suction cup outer diameter	14-16 mm
Contact lip diameter	10-12 mm
Central vacuum hole	4-6 mm
Bellows height	12-18 mm
Vertical compliance	3-5 mm
Recommended vacuum range	-30 to -60 kPa
Material	Food-safe silicone or soft TPU

Why This End-Effector Is Suitable

The vacuum suction gripper is suitable for this assignment for the following reasons:

- It is gentle for fragile and surface-sensitive food products.
- It requires only one compact actuator system: vacuum ON/OFF.
- It can pick chocolates of slightly different shapes and colours.
- It keeps the robot lightweight, which is important for a 5-bar parallel mechanism.
- The bellows structure compensates for small height errors in the conveyor and tray.
- A pressure sensor can detect failed picks before the robot moves to the tray.

Vision and Sensor System

An overhead RGB camera is selected to identify the chocolates on the conveyor and determine their colour. The camera also helps map the tray cells to robot coordinates. The following sensors are used:

Sensor	Purpose
RGB camera	Detects chocolate colour and position
Conveyor sensor	Detects arrival of chocolate at pick-up zone
Vacuum pressure sensor	Confirms successful gripping
Motor encoders	Provide joint position feedback
Limit switches	Define home position of the robot

Safety, Hygiene and Practical Considerations

Since the robot handles food, the end-effector should be made from food-safe silicone or TPU. The suction cup should be removable for cleaning. The robot should operate inside a clean enclosed area to prevent contamination. The vacuum level should be adjustable so that the chocolate is held securely but not damaged.

Discussion

The proposed design combines the speed advantage of a 5-bar planar parallel robot with the gentle handling capability of a soft vacuum suction end-effector. The 5-bar robot provides accurate x-y positioning over the tray, while the compliant suction cup performs the z-direction contact required for picking and placing. The major design challenge is calibration, because the robot must accurately map camera coordinates, robot coordinates and tray grid positions.

Conclusion

A complete robotic solution has been proposed for automated chocolate arrangement using a 5-bar planar parallel robot. The system includes a symmetric 5-bar mechanism, inverse kinematic model, soft vacuum suction end-effector, camera-based detection, sensor feedback and smooth motion planning. The proposed end-effector is especially suitable for this task because it can handle small fragile chocolates gently, accurately and repeatedly. Therefore, the design satisfies the assignment requirement of picking chocolates from a conveyor and placing them into a 10 x 10 chocolate tray to construct a picture board.

References

[1] A. Joubair, M. Slamani, and I. A. Bonev, "Kinematic calibration of a five-bar planar parallel robot using all working modes," *Robotics and Computer-Integrated Manufacturing*, vol. 29, pp. 15-25, 2013.

[2] T. D. Le, H.-J. Kang, and Q. V. Doan, "Optimal kinematic design of symmetrical five-bar planar parallel manipulators," in *Proc. IEEE Conf.*, 2013.

[3] M. T. Hoang, T. T. Vuong, and C. B. Pham, "Study and development of parallel robots based on 5-bar linkage," in *National Conference on Machines and Mechanisms*, Ho Chi Minh City, Vietnam, 2015.

[4] B. J. Gamble, "5-Bar Linkage Kinematic Solver and Simulator," Undergraduate thesis, University of Vermont, 2020.

[5] M. Krampe, M. Miro, M. A. Villanueva Portela, and B. Kuhlenkoetter, "Determination of gripping forces for handling surface-sensitive objects," in *Annals of Scientific Society for Assembly, Handling and Industrial Robotics*, 2020.

[6] E. Andrade, G. Cerecerez, M. Garzon, and A. Quito, "Design and implementation of a robotic arm prototype for a streamlined small chocolate packaging process," *Engineering Proceedings*, vol. 47, p. 1, 2023.

[7] G. Cerecerez, A. Quito, L. Cordova, F. Abedrabbo, G. Mosquera, and M. Venegas, "A robotic arm prototype for automated packaging of chocolates with artificial intelligence," in *Proc. LACCEI International Multi-Conference for Engineering, Education, and Technology*, Mexico City, Mexico, 2025.

[8] Y. Zhang and Z. Wang, "Review of robotic grippers for high-speed handling of fragile foods," *Advanced Robotics*, vol. 39, no. 17, pp. 1054-1070, 2025.

[9] J.-Y. Lee *et al*., “Shape-adaptive universal soft parallel gripper for delicate grasping using a stiffness-variable composite structure,” *IEEE Transactions on Industrial Electronics*, vol. 68, no. 12, pp. 12441-12452, Dec. 2021.

Github link: